WY 140-2N v2 WY 155-2N v2

VHF Base Station 2 Elements Yagi Antennas 140-175 MHz

MAIN FEATURES

- Directional Wideband Yagi antennas
- Developped to provide a highly symmetrical radiation pattern in E/H-plane
- Computer-designed for high gain and excellent front-to-back ratio
- Anodized aluminium and stainless steel hardware
- Fully designed & Manufactured in Italy

UP GRADED FEATURES

- Fully sealed, IP67 waterproof
- New internal design to maximize Power handling



Electrical Data	WY 140-2N	WY 155-2N
Type	2 elements Yagi	
Frequency Range @ SWR ≤ 1.5	140 - 160 MHz	155 - 175 MHz
Impedance	50 Ω	
Radiation (H-plane) beamwidth @ -3 dB	195° - HCM code = 053KA00	165° - HCM code = 145KA00
Radiation (E-plane) beamwidth @ -3 dB	75° - HCM code = 037EA36	75° - HCM code = 037EA36
Front to back ratio	≥ 9 dB	
Polarization	Linear Vertical or Horizontal	
Gain	3.05 dBd - 5.2 dBi	
Max Power (CW) @ 30°C	250 Watts	
Grounding Protection	All metal parts are DC-grounded, the inner conductor shows a DC short	
Connector	N-female with rubber protection cap	

Mechanical Data		
Materials	Anodized 6063-T5 Aluminium, EPDM rubber, thermoplastic UV stabilized, Chromed Brass	
Wind Load @ 150 km/h	92 N	88 N
Wind Resistance	180 Km/h; 112 mi/h	180 Km/h; 112 mi/h
Wind Surface	0.071 m^2; 0.76 ft^2	0.068 m^2; 0.72 ft^2
Dimensions W x H (approx.)	740 x 1110 mm; 2.4 x 3.6 ft	740 x 955 mm; 2.4 x 3.1 ft
Turning radius (approx.)	770 mm; 2.5 ft	750 mm; 2.45 ft
Weight (approx.)	1490 gr; 3.3 lb	1450 gr; 3.2 lb
Ingress Protection	IP 67	
Operating temperature	-40° C to +60° C	
Mounting Mast	∅ 35 - 52 mm; 1.4 - 2.1 in	
Boom / Dipole / Element Diameter	∅ 32 mm; 1.25 in / ∅ 24 mm; 0.95 in / ∅ 12 mm; 0.5 in	

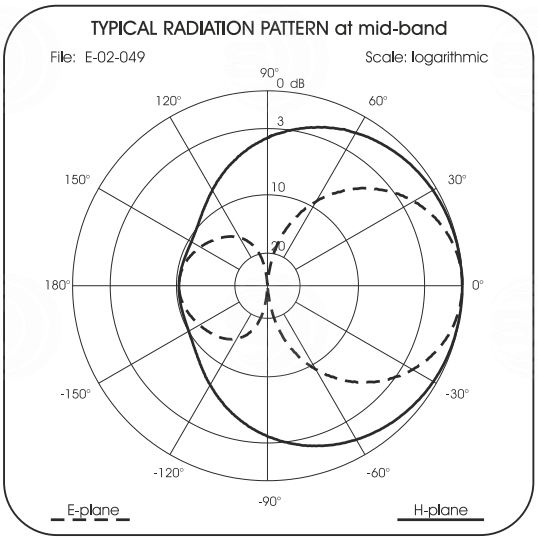

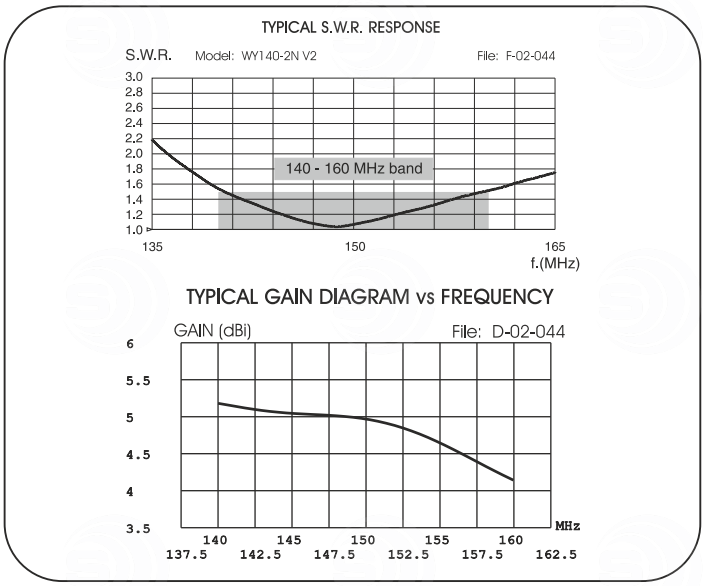

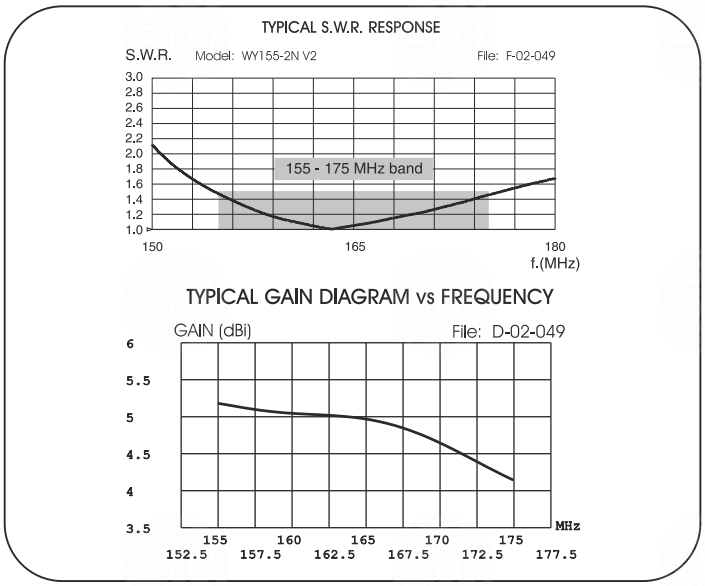

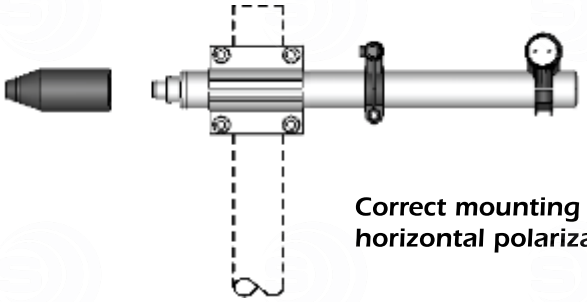

Correct mounting for horizontal polarization

Fig.1

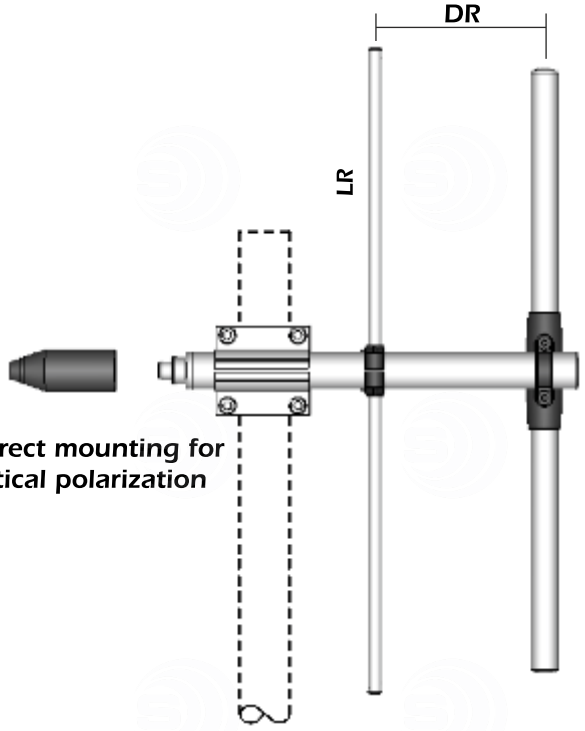

Correct mounting for vertical polarization

		LR	DR
WY 140-2N	(mm)	1105	432
	(in)	43.5	17.0
WY 155-2N	(mm)	950	432
	(in)	37.4	17.0

Element Mounting

1) By means of a meter measure the aluminium elements **A** and position them in the plastic support **B** of the boom according to **fig.1**.
2) Place the reference marker of the aluminium element **A** in the centre of the plastic support **B** (see **fig. 3**) and lock the screws **C** by the supplied key **D** (**fig. 4**). When the screws touch the aluminium tubes you can finally lock them turning for 1.5 turns.
Warning: do not exceed 1.5 turns. The plastic support threads could be damaged.
3) Insert the plastic caps **E** on the aluminium elements **A** (see **fig. 4**)

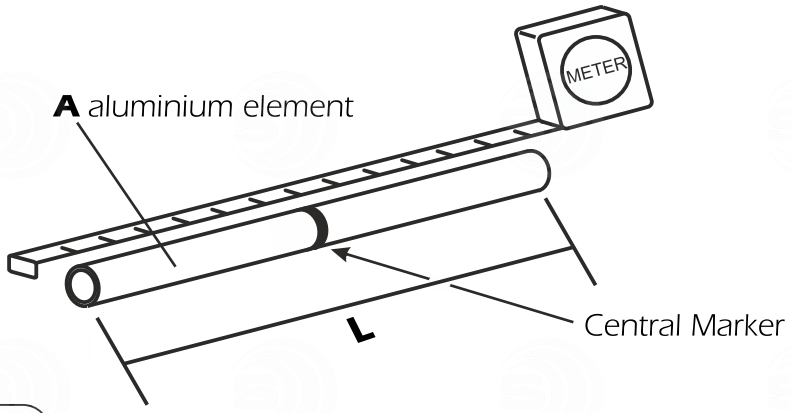

Fig.2

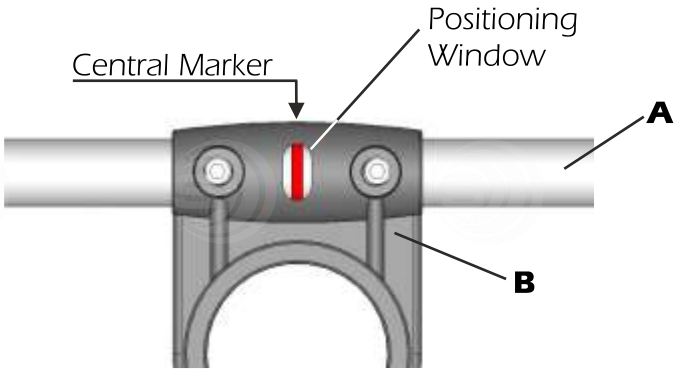

Fig.3

Part list	
Q.ty	*Description*
1	**A**) Aluminum tubes
2	**C**) M5x6 Hexagon socket set screw
1	**D**) 2.5mm Hexagonal key
2	**E**) Plastic cap

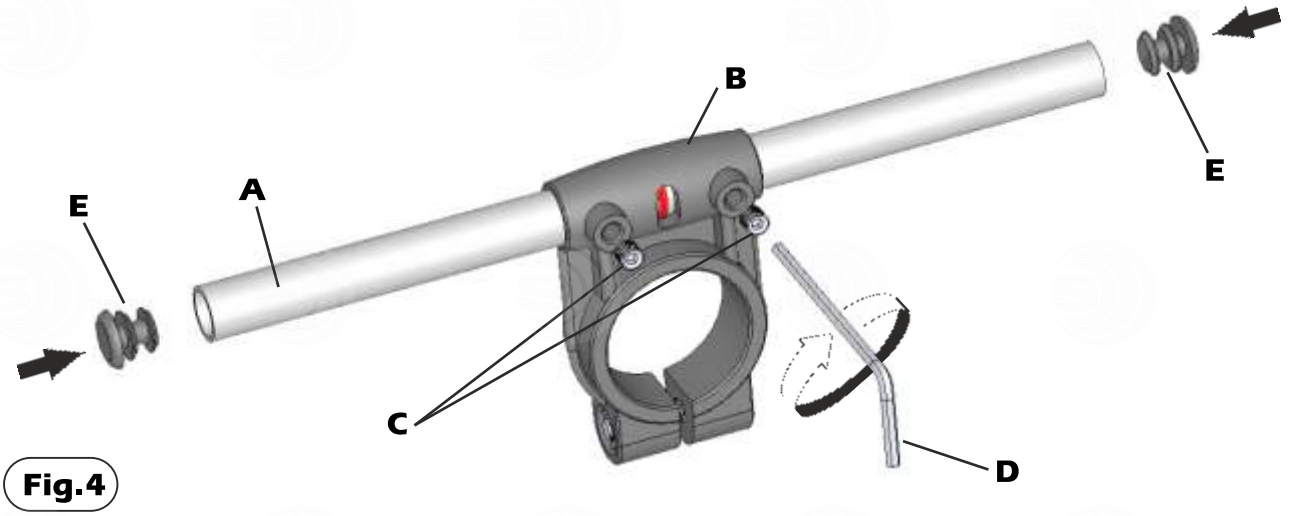

Fig.4

Dipole mounting

1) Place the O-ring gasket **F** on the dipole connector **G**. (See **Fig.5**)
2) Insert the antenna's dipole **H** in the dipole connector **G**
3) Fix the antenna's dipole **H** by using the palstic fixing clamp **I** and the screws **J**. Lock the screws to well fix the plastic parts to avoid any gap (see **Fig.6**)
Remark: the antenna's dipole must be aligned to the elements

Part list	
Q.ty	*Description*
1	**F**) O-ring gasket
1	**H**) Antenna's dipole
1	**I**) Plastic fixing clamp
2	**J**) Tapping Screws for plastic

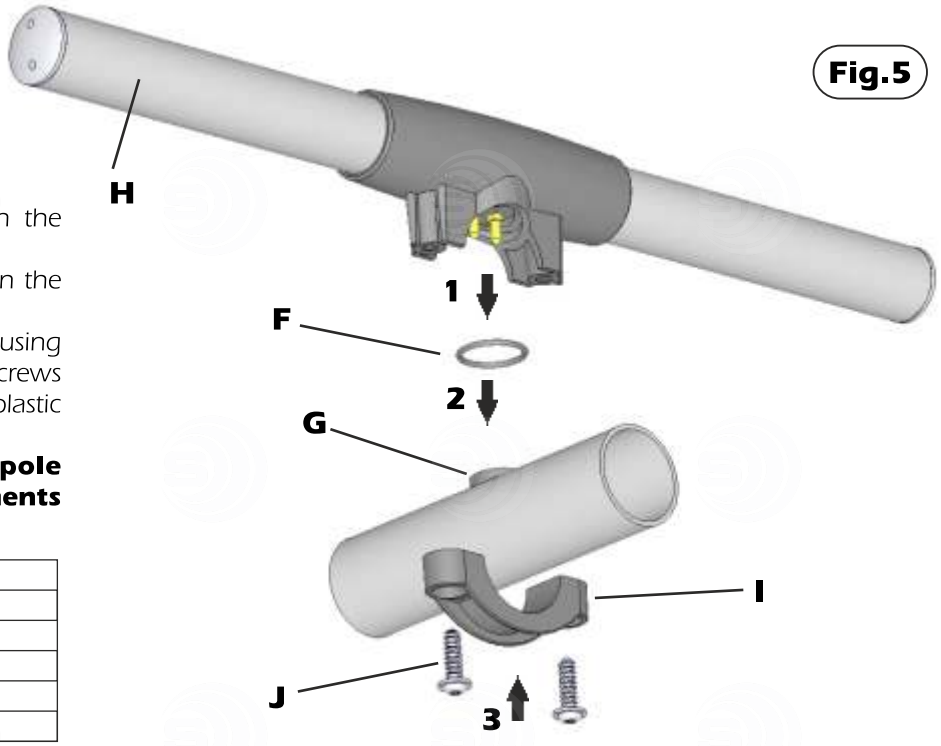

Fig.5

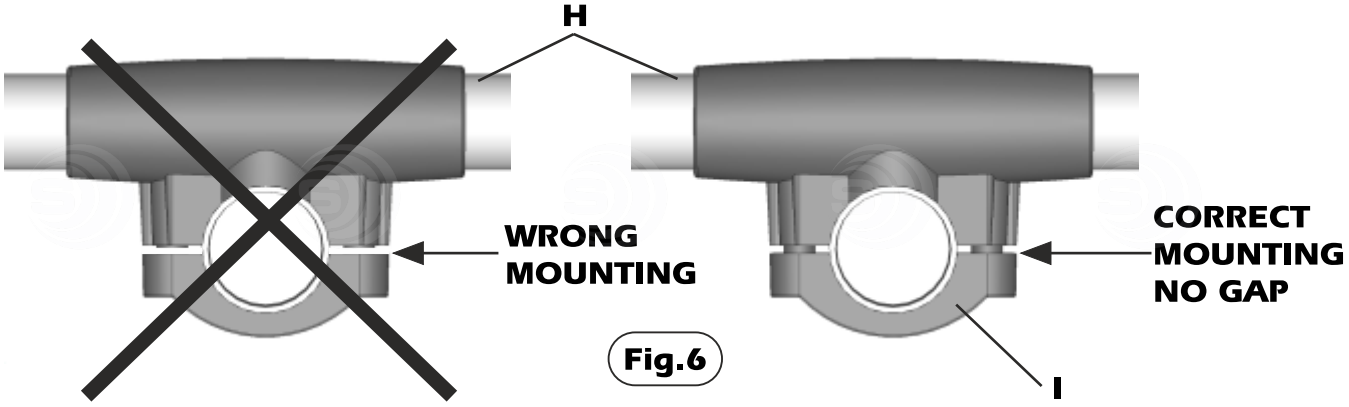

Fig.6

MOUNTING INSTRUCTIONS

FT-6 Bracket Part list		
Pos	*Q.ty*	*Description*
1	1	Extruded aluminium bracket
2	2	Steel bracket
3	2	M8x216 U-bolt
4	4	M8 Grower washer
5	4	M8 Hexagonal nut
6	2	M6x20 Hexagonal head screw
7	2	M6 Grower washer
8	2	M6 Hexagonal nut
9	1	Connector Protection Cap
10	1	Plastic clamping band
Dimensions:		90x85x6 mm; 3.5x3.3x2.6 in
Weight:		550 gr, 1.2 lb
Re-order code: P/N 2519913.00		

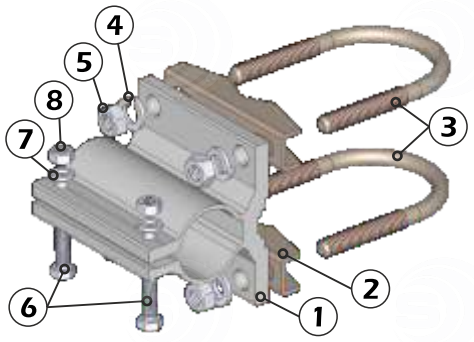

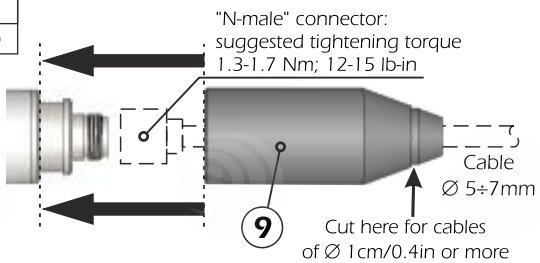

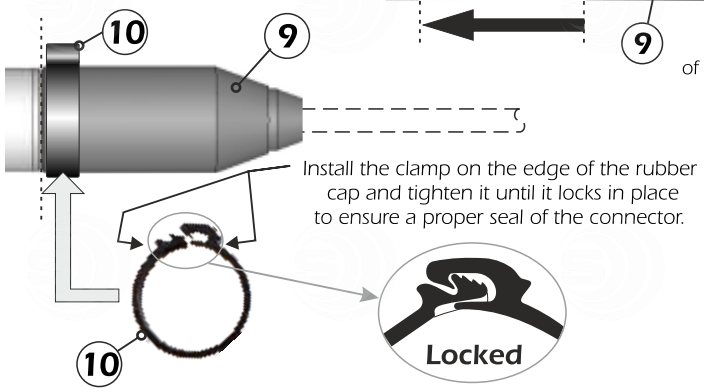

Optional Tilting Bracket

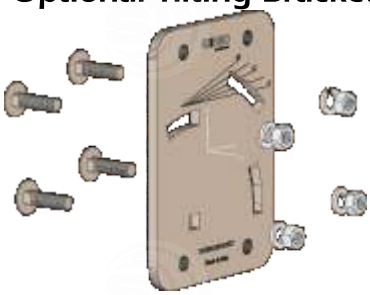

Order p/n: 2519803.00
Materials & Hardware: zinc plated steel
Dimensions: 115 x 155 x 6 mm.
Weight: 800 gr

Part list	
Q.ty	*Description*
1	115x155x6 Tilting bracket
4	M8x25 Spheric head screw
4	M8 Grower washer
4	M8 Hexagonal nut

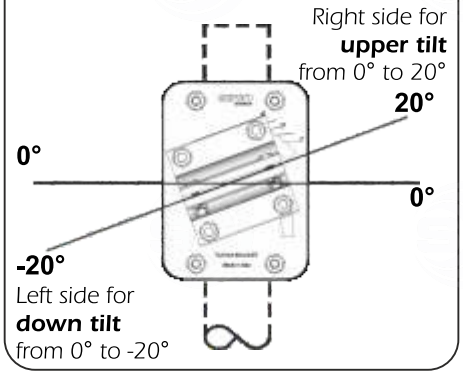

Stacking and Baying distance

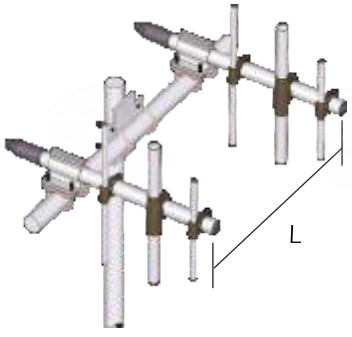

Vertical polarization
(Bayed)
L= 1.1 m; 3.6 ft

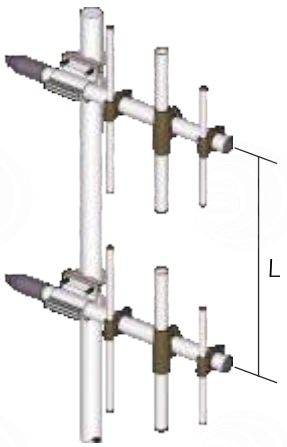

Vertical polarization
(Stacked)
L= 1.6 m; 5.25 ft

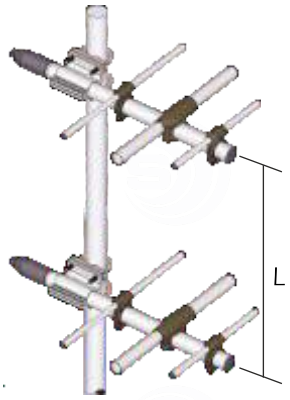

Horizontal polarization
(Stacked)
L= 1.1 m; 3.6 ft

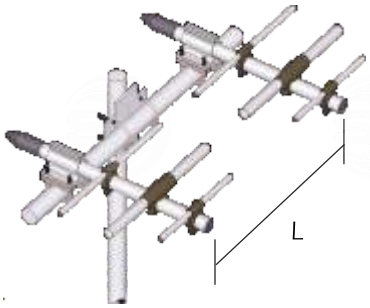

Horizontal polarization
(Bayed)
L= 1.6 m; 5.25 ft

SIRIO antenne HI-QUALITY ANTENNAS MADE IN ITALY

© Copyright **SIRIO antenne** - Technical Data are subjected to change - Printed in ITALY - Rev. 11/06/2026 - Cod. ID353, pag. 4/4