WD 380-N v2

UHF Base Station Dipole Antenna 380-470 MHz



MAIN FEATURES

- Directional Wideband Dipole antenna
- Developped to provide a highly symmetrical radiation pattern in E/H-plane
- Computer-designed for high gain and excellent front-to-back ratio
- Anodized aluminium and stainless steel hardware
- Fully designed & Manufactured in Italy

UP GRADED FEATURES

- Fully sealed, IP67 waterproof
- New internal design to maximize Power handling

Electrical Data	
Type	Half Wave Dipole
Frequency Range @ SWR ≤ 1.5	380 - 470 MHz
Impedance	50 Ω
Radiation (H-plane) beamwidth @ -3 dB	200° - HCM code = 100LA00
Radiation (E-plane) beamwidth @ -3 dB	68° - HCM code = 034EA40
Front to back ratio	≥ 8 dB
Polarization	Linear Vertical
Gain	2.35 dBd - 4.5 dBi
Max Power (CW) @ 30°C	160 Watts
Grounding Protection	All metal parts are DC-grounded, the inner conductor shows a DC short
Connector	N-female with rubber protection cap

Mechanical Data	
Materials	Anodized 6063-T5 Aluminium, EPDM rubber, thermoplastic UV stabilized, Chromed Brass
Wind Load @ 150 km/h	48 N
Wind Resistance	200 Km/h; 124 mi/h
Wind Surface	0.033 m^2; 0.35 ft^2
Dimensions W x H (approx.)	380 x 340 mm; 1.25 x 1.1 ft
Turning radius (approx.)	240 mm; 0.8 ft
Weight (approx.)	950 gr; 2.1 lb
Ingress protection	IP 67
Operating temperature	-40° C to +60° C
Mounting Mast	⌀ 35 - 60 mm; 1.4 - 2.4 in
Boom Diameter / Dipole Diameter	⌀ 32 mm; 1.25 in / ⌀ 24 mm; 0.95 in

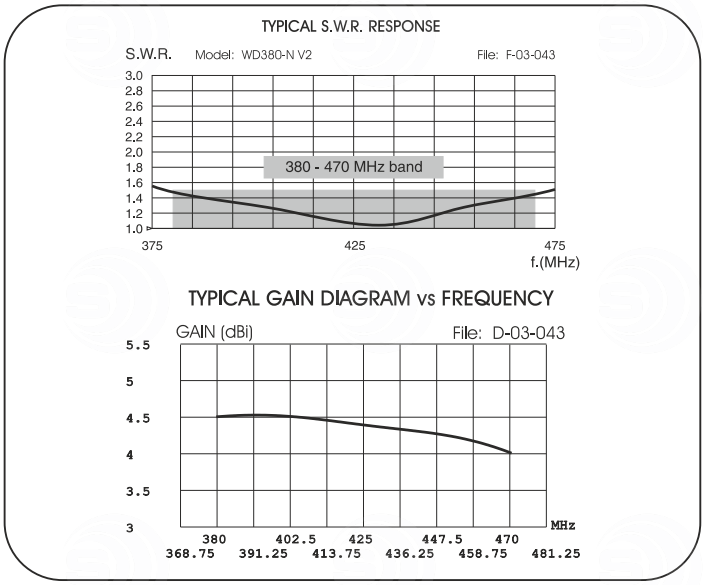

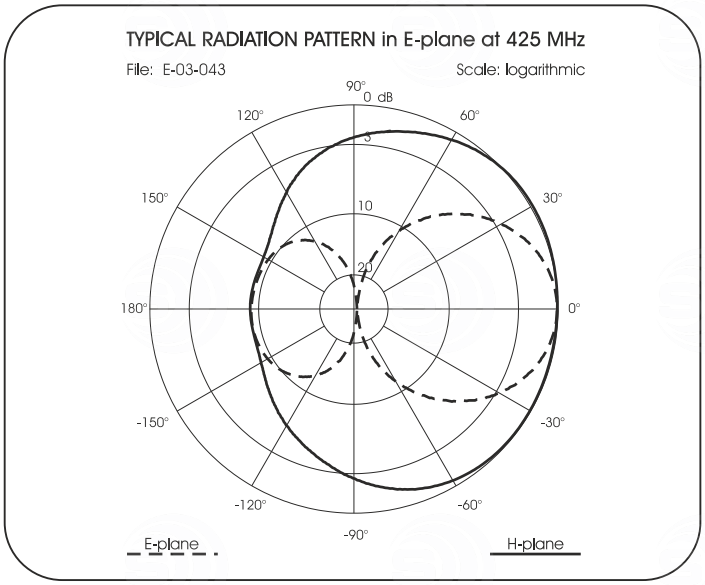

SIRIO antenne

HI-QUALITY ANTENNAS MADE IN ITALY

MOUNTING INSTRUCTIONS

Correct mounting for vertical polarization

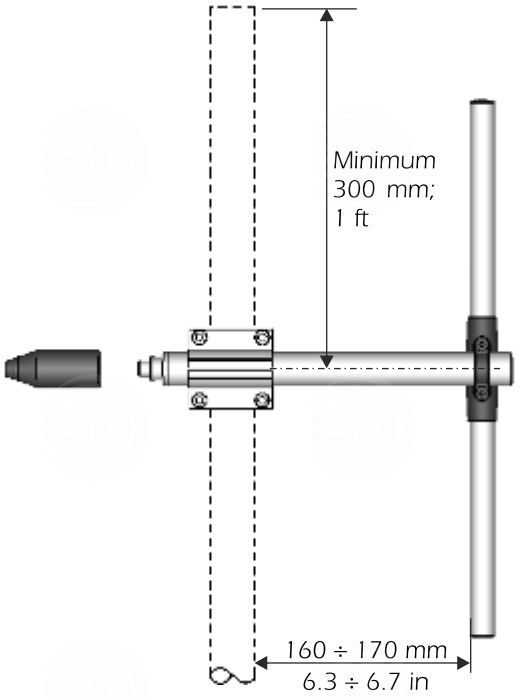

FT-6 Bracket Part list		
Pos	*Q.ty*	*Description*
1	1	Extruded aluminium bracket
2	2	Steel bracket
3	2	M8x216 U-bolt
4	4	M8 Grower washer
5	4	M8 Hexagonal nut
6	2	M6x20 Hexagonal head screw
7	2	M6 Grower washer
8	2	M6 Hexagonal nut
9	1	Connector Protection Cap
10	1	Plastic clamping band
Dimensions:		90x85x6 mm; 3.5x3.3x2.6 in
Weight:		550 gr, 1.2 lb
Re-order code: P/N 2519913.00		

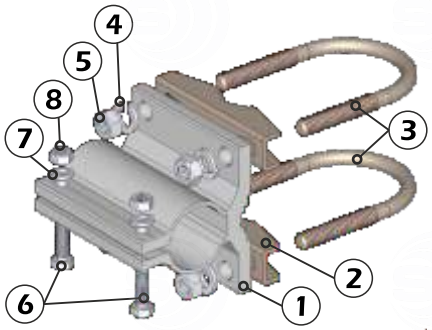

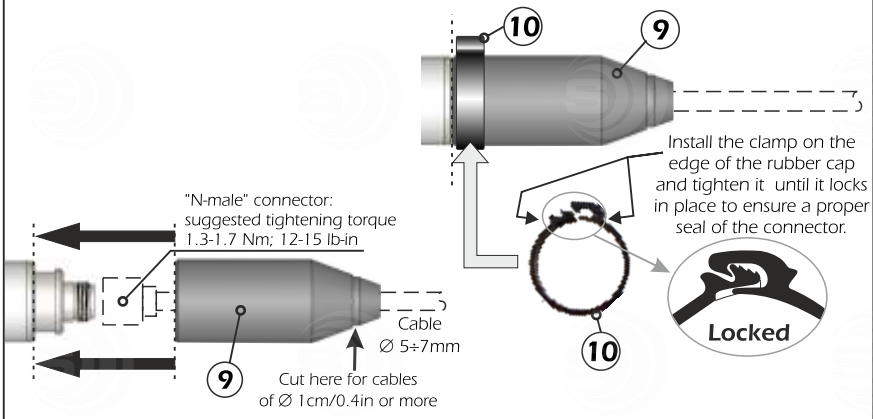

Side mast mounting for DIRECTIONAL pattern: Stacking distance

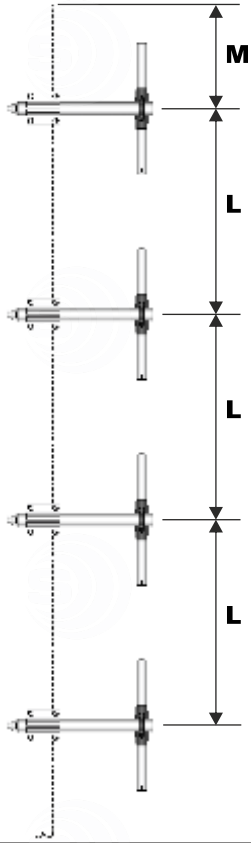

Vertical polarization
(Stacked)
L= 650 mm; 2.1 ft

No. of dipole	Max Gain (dBi)	HPBW E-plane	HPBW H-plane
2	7.3	30°	200°
4	10.2	14°	200°
6	12	9°	200°
8	13	7°	200°

2 Dipole array

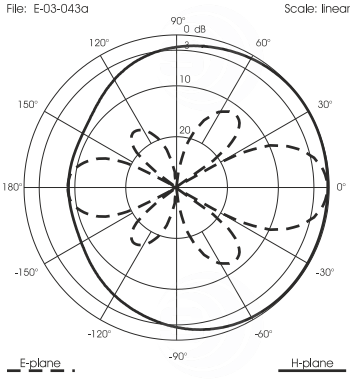

4 Dipole array

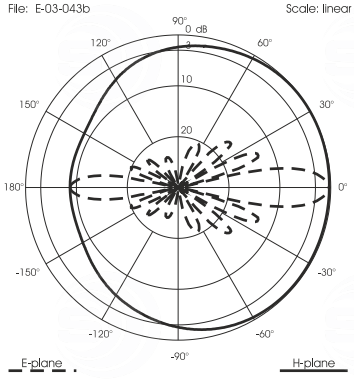

6 Dipole array

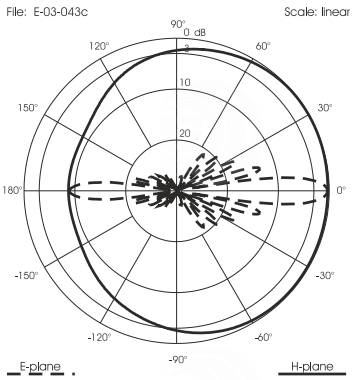

8 Dipole array

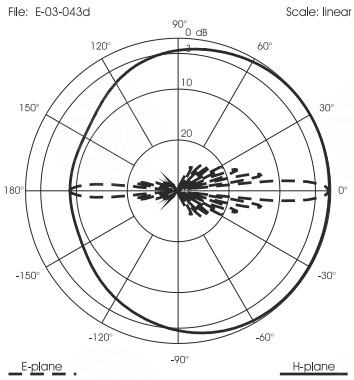

SIRIO antenne
HI-QUALITY ANTENNAS MADE IN ITALY

© Copyright SIRIO antenne - Technical Data are subjected to change - Printed in ITALY - Rev. 11/06/2026 - Cod. ID348